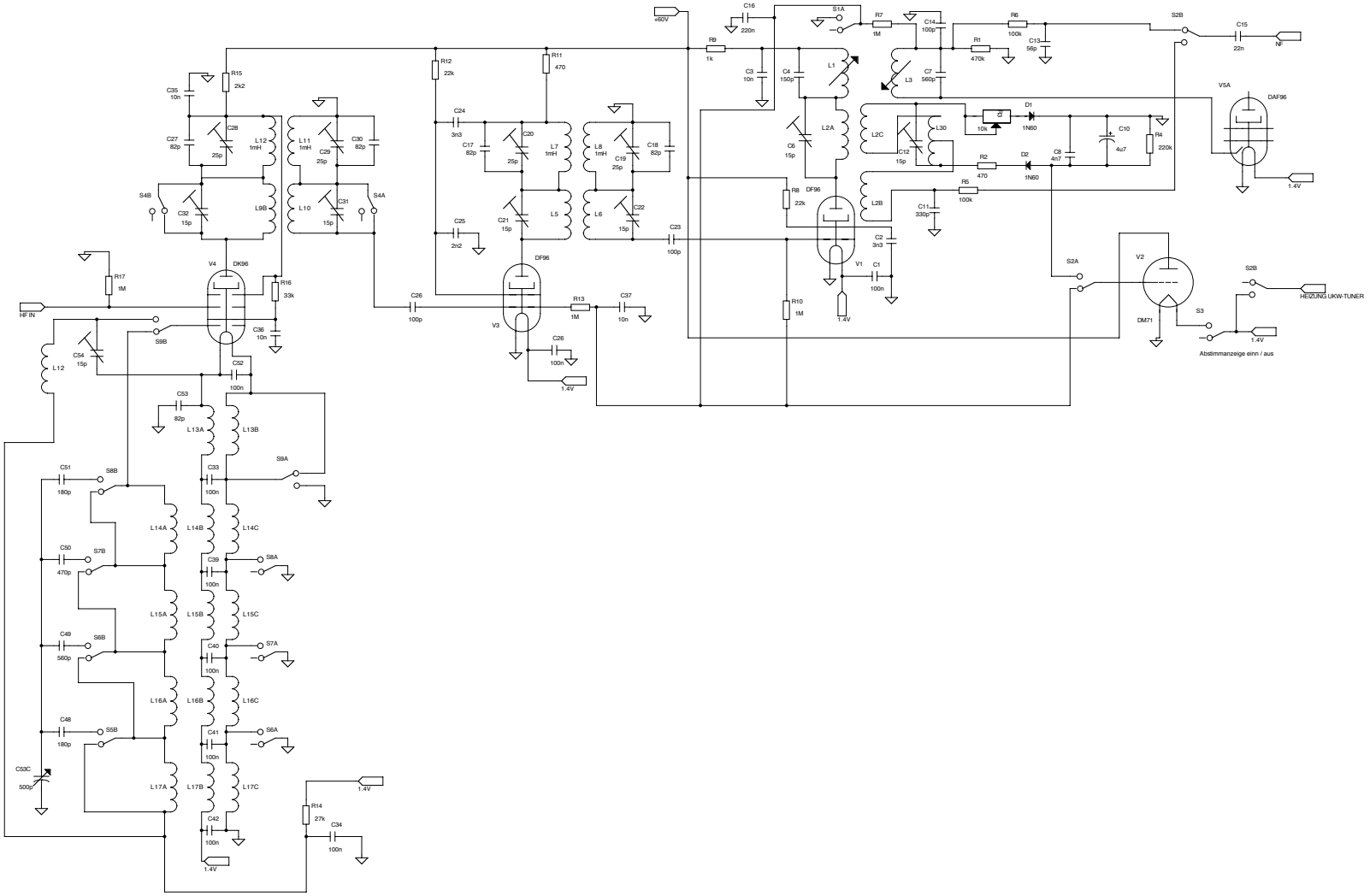

Relais:

S5: LW

S6: MW

S7: K1

S8: K2

S1..S4, S9: UKW/AM