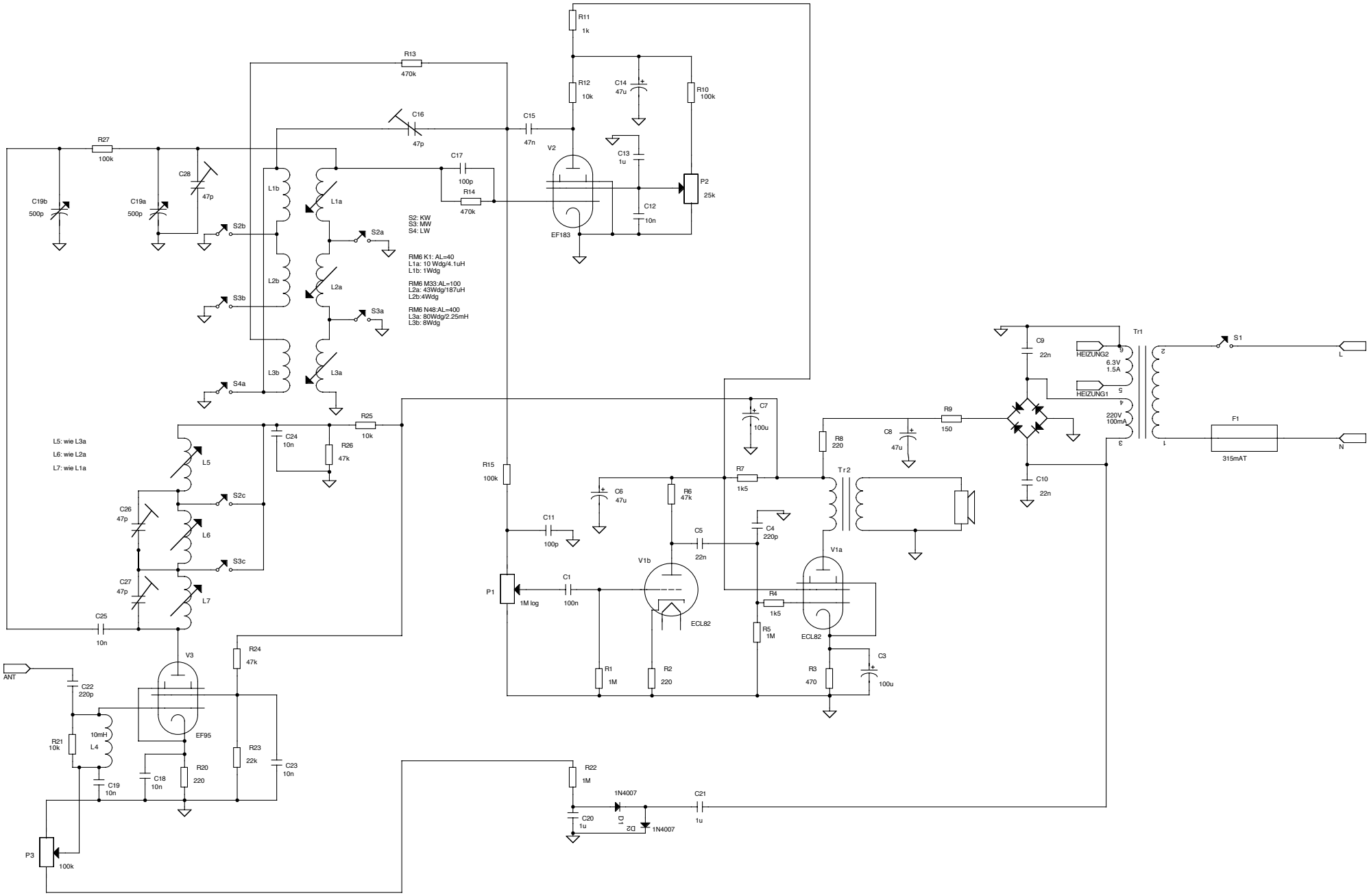
R11
1k
R12
10k
C14
47u
R10
100k
R13
470k
C16
47p
C15
47n
V2
C13
1u
P2
25k
C12
10n
EF183
R27
100k
C28
47p
C17
100p
R14
470k
C19b
500p
C19a
500p
S2b
S2a
S3b
S3a
S4a
L1b
L1a
L2b
L2a
L3b
L3a
S2: KW
S3: MW
S4: LW
RM6 K1: AL=40
L1a: 10 Wdg/4.1uH
L1b: 1Wdg
RM6 M33:AL=100
L2a: 43Wdg/187uH
L2b:4Wdg
RM6 N48:AL=400
L3a: 80Wdg/2.25mH
L3b: 8Wdg
L5: wie L3a
L6: wie L2a
L7: wie L1a
R25
10k
C24
10n
R26
47k
L5
L6
L7
S2c
S3c
C26
47p
C27
47p
C25
10n
R15
100k
C7
100u
R9
150
C8
47u
R8
220
R7
1k5
C6
47u
R6
47k
C11
100p
C5
22n
C4
220p
Tr2
V1b
V1a
P1
1M log
C1
100n
ECL82
R4
1k5
R5
1M
ECL82
R1
1M
R2
220
R3
470
C3
100u
C9
22n
C10
22n
Tr1
HEIZUNG2
6.3V
1.5A
HEIZUNG1
220V
100mA
S1
L
N
F1
315mAT
ANT
C22
220p
V3
R24
47k
EF95
R21
10k
10mH
L4
C19
10n
C18
10n
R20
220
R23
22k
C23
10n
P3
100k
R22
1M
1N4007
D1
D2
1N4007
C20
1u
C21
1u